SYSTEM SCAFFOLD
RANGER™ STAIR
User Guide

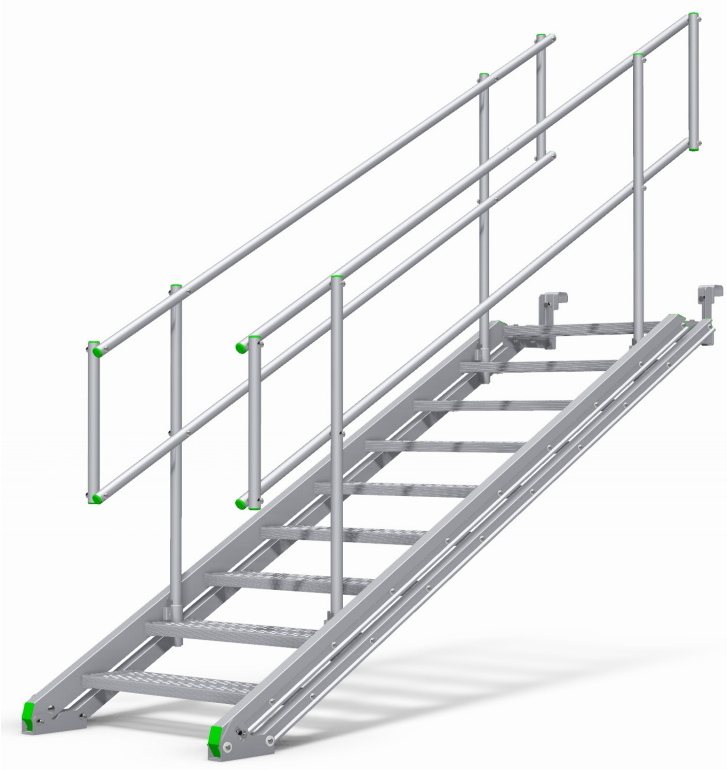

HIRE & SALES

ALTRAD

LW/04.24

Altrad Hire & Sales

Support for Construction & Industry

Altrad Hire & Sales is the UK's leading supplier of: Scaffolding, Temporary Fencing, Light Access, Edge Protection, Safety Decking and Groundworks for hire and sale.

OUR **CUSTOMER COMMITMENT** IS TO DELIVER:

BEST **QUALITY**

We work closely with our suppliers to ensure consistent product quality every time. All our products are specified to meet or exceed statutory requirements, verified by our Quality Assurance team.

BEST **AVAILABILITY**

Our nationwide branch network, transport fleet and stock holding ensure we can supply your equipment needs. What, When and Where you need equipment.

BEST **PARTNERSHIP**

We can take care of all your equipment needs; supplemented by a full range of engineering, design, specification and business services. Our focus is to work together, supporting the growth of your business.

BEST **VALUE**

Our global supply chain, purchasing and lean business means we don't pass on unnecessary costs to you. We aim to provide consistently low prices and the best value when you buy or hire from us.

Contents

Introduction 4
Component Recognition 4
Core Elements 4
Guardrails 5
Connectors 5
Assembly 6
Basic Assembly 6
Alternative Connector Applications 9
- 48.3mm Tube 9
- Horizontal Surfaces 9
- Timber Joists 9

Technical Data 10
- Stair Assemblies 10
- Guardrail Units 10
- Stair Guardrail Requirements 10
- Connectors 10

Model Geometry 11
- Model Application Range 11
- Tread Details 12

Structural Performance Data 13
Typical Layouts 13
- Tube & Fitting Scaffold, Alternating Direction, External, Parallel 13
- Tube & Fitting Scaffold, Alternating Direction, External, Perpendicular 14

Specific Risk & Hazards to Health 15
- During Installation 15
- Post-Installation 15

Inspection & Maintenance 15
- Inspection 15
- Maintenance 15

Introduction

The DESSA RANGER™ Stair is a range of self-contained, pre-assembled aluminium stair units, flat packed, which automatically adjust to a wide range of lift heights, making them ideal for use in tube and fitting scaffolds along with other applications. The DESSA RANGER™ Stair is fully compliant with BS EN12811 for all possible configurations.

Component Recognition

Core Elements

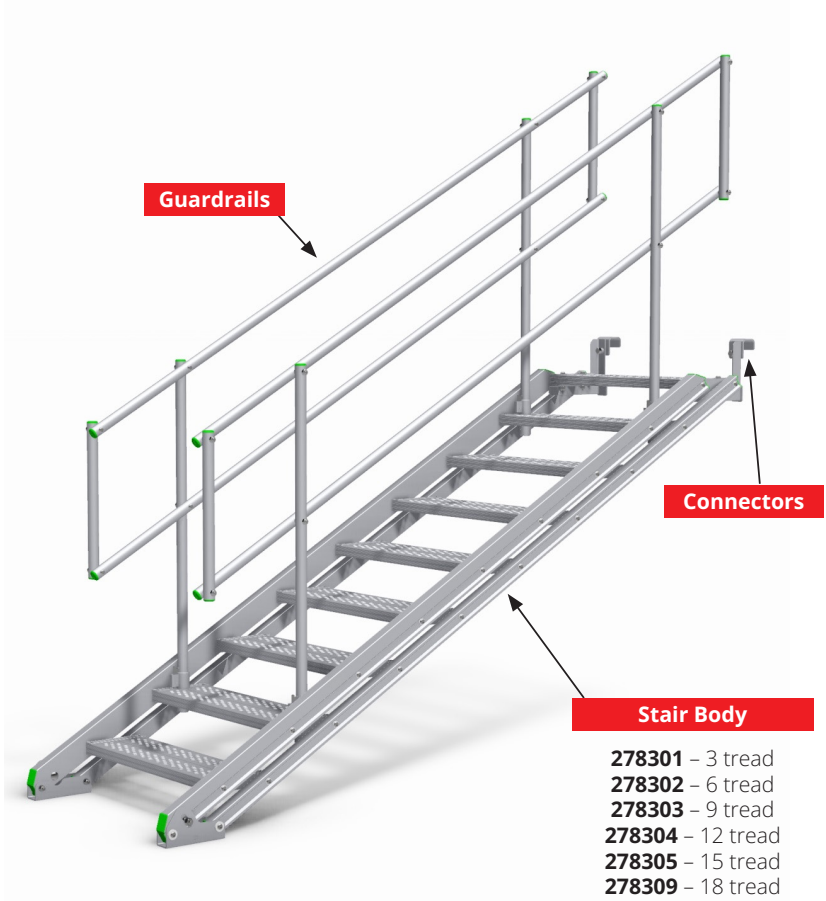

Component Recognition

Guardrails

The DESSA RANGER™ Stair guardrails are available in two lengths to correspond to the stair body being used. Instructions of which guardrails are to be used with each stair body can be found in this document.

278310
Ranger™ Guardrail Mini

278307
Ranger™ Guardrail Short

278306
Ranger™ Guardrail Long

Connectors

The DESSA RANGER™ Stair bodies include the tube connector brackets. There are also interchangeable brackets available for when the DESSA RANGER™ Stair is used for alternative applications.

Tube Connector Bracket Left

Tube Connector Bracket Right

278308 - Slab Connector Bracket Left

278308 - Slab Connector Bracket Right

Assembly

Basic Assembly

Step 1: Engage RANGERTM Stair assembly to tube using connector brackets.

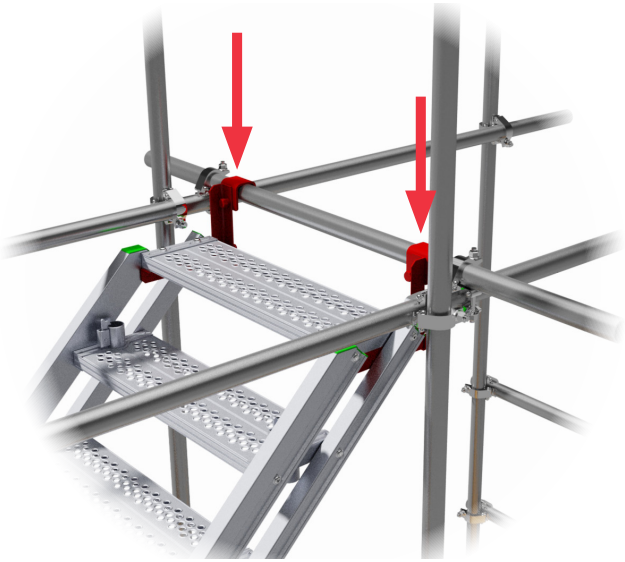

Assembly

Step 2: From a safe working level, tighten the integrated anti-uplift bolts on the underside of the tube connector brackets, using a standard scaffold spanner.

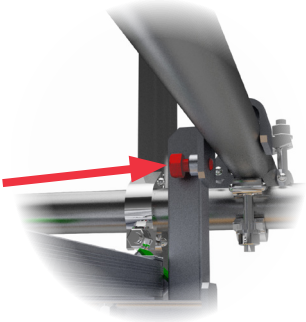

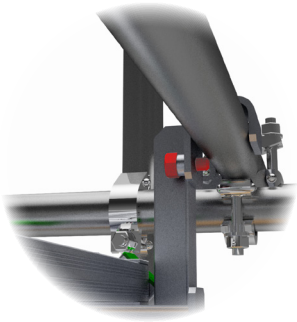

Do not overtighten the anti-uplift bolts.

Step 3: Insert guardrail assemblies into the guardrail sockets. The built-in spring retainers will lock these in place.

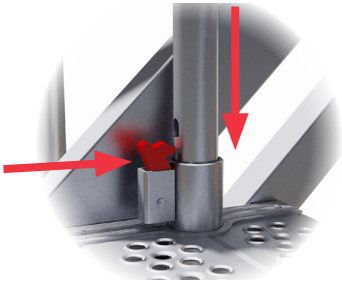

Assembly

Step 4: Articulate guardrails to find the optimal angle and level treads.

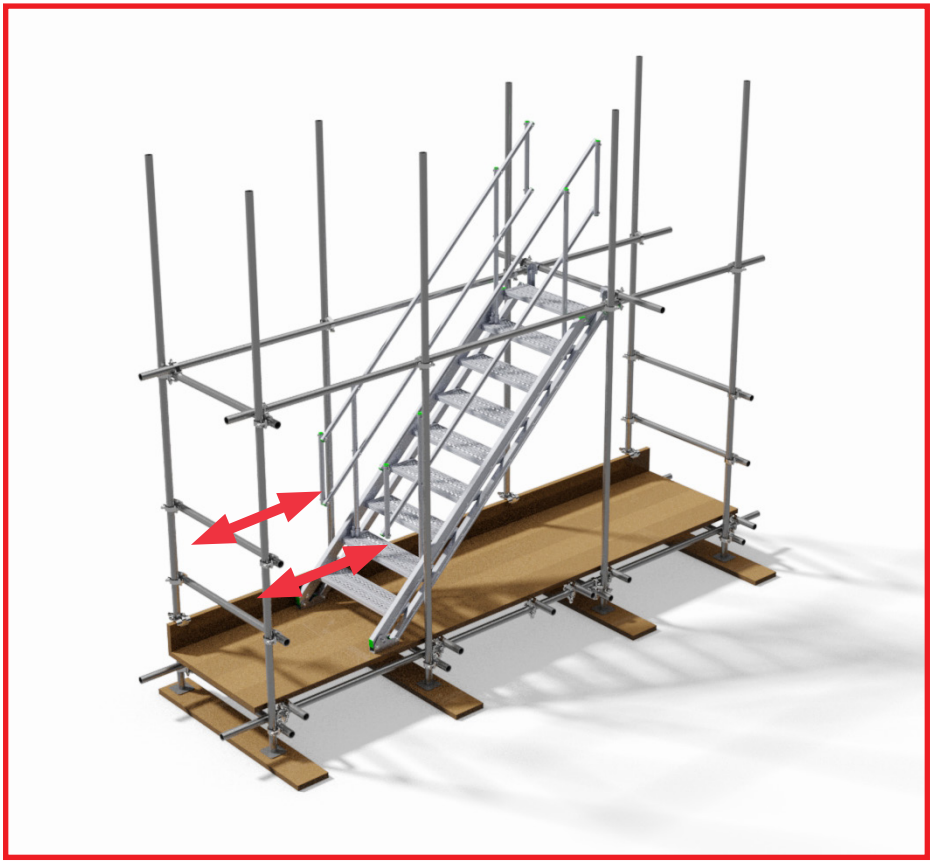

Step 5: Lock the stair by engaging locking nut into footplate, using a standard scaffold spanner.

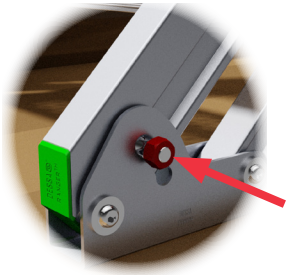

Ensure nut shoulder locates into one of the preformed holes in the footplate.

Alternative Connector Applications

48.3mm Tube

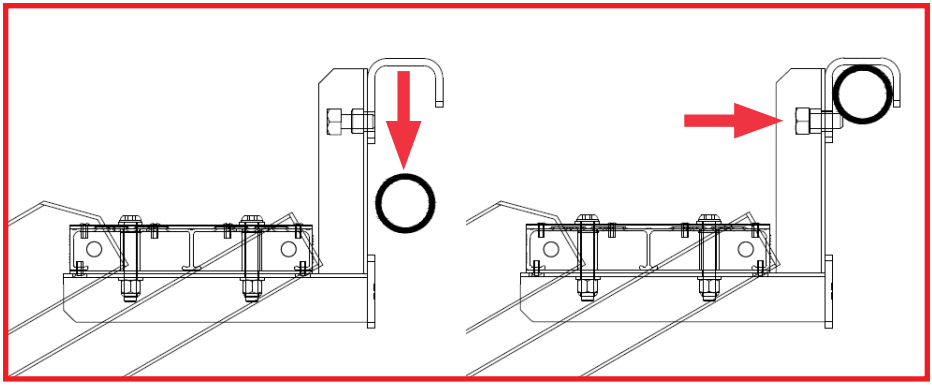

Use tube connector brackets to attach the DESSA RANGER™ Stair to 48.3mm scaffold tubes. The brackets can be secured to the tube using the integrated bolt fixing, thereby preventing uplift.

Horizontal Surfaces

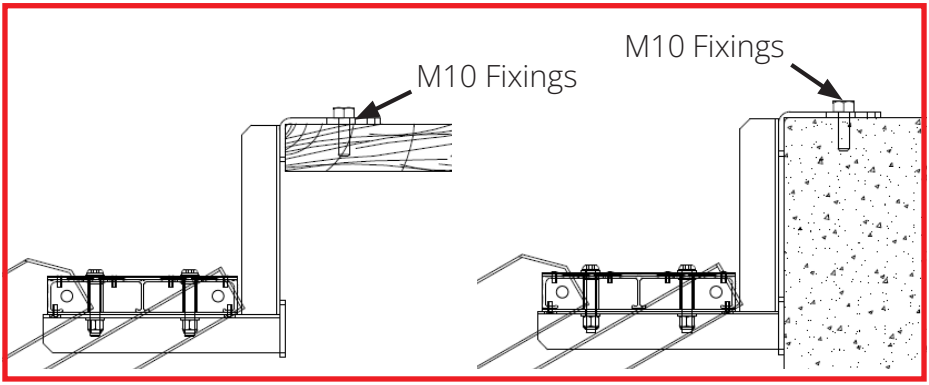

For horizontal surfaces use brackets slab connector brackets 278308 with M10 fixings to secure.

Timber Joints

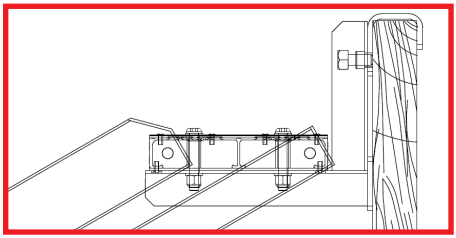

The tube connecotr brackets brackets are also to be used with timber joists up to 50mm in width. The anti-uplift bolt can be used to secure the stair by tightening lightly ito the timber joist.

Technical Data

Stair Assemblies

Code	Description	Weight	Minimum Height	Maximum Height
278301	Ranger™ Stair, 3 Tread	18.49kg	557mm	783mm
278302	Ranger™ Stair, 6 Tread	29.66kg	985mm	1457mm
278303	Ranger™ Stair, 9 Tread	40.71kg	1412mm	2130mm
278304	Ranger™ Stair, 12 Tread	51.92kg	1840mm	2804mm
278305	Ranger™ Stair, 15 Tread	62.91kg	2267mm	3478mm
278309	Ranger™ Stair, 18 Tread	87.80kg	2690mm	4146mm

Stair Guardrail Requirements

Description	Guardrail Mini	Guardrail Short	Guardrail long
Ranger™ Stair, 3 Tread	2	-	-
Ranger™ Stair, 6 Tread	-	2	-
Ranger™ Stair, 9 Tread	-	-	2
Ranger™ Stair, 12 Tread	-	4	-
Ranger™ Stair, 15 Tread	-	2	2
Ranger™ Stair, 18 Tread	-	-	4

Guardrail Units

Code	Description	Weight
278310	Ranger™ Guardrail Mini	5.21kg
278307	Ranger™ Guardrail Short	5.90kg
278306	Ranger™ Guardrail Long	7.30kg

Connectors

Code	Description	Weight
Inc. with Stair	Tube Connector Left	1.36kg
Inc. with Stair	Tube Connector Right	1.36kg
278308	Slab Connector Left	1.38kg
278308	Slab Connector Right	1.38kg

Model Geometry

Model Application Range

Part Number	Minimum Height	Maximum Height
278301	557mm	783mm
278302	985mm	1457mm
278303	1412mm	2130mm
278304	1840mm	2804mm
278305	2267mm	3478mm
278309	2690mm	4146mm

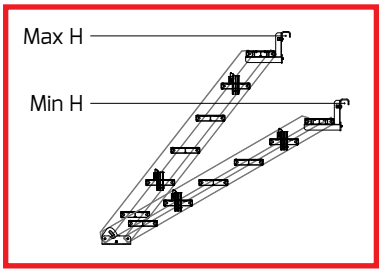

Note: the above table relates to application range when using tube connector brackets only. The height measurement is taken to the centre of the scaffold tube to which the connector bracket engages.

DESSA RANGER™ **278301**

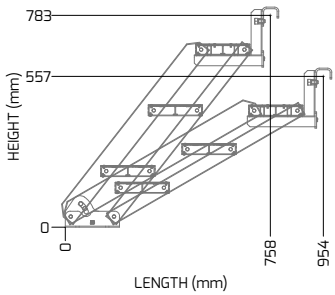

DESSA RANGER™ **278302**

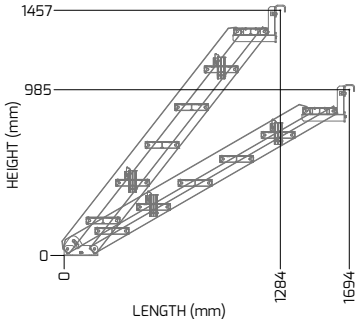

DESSA RANGER™ **278303**

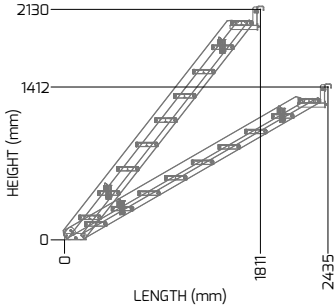

DESSA RANGER™ **278304**

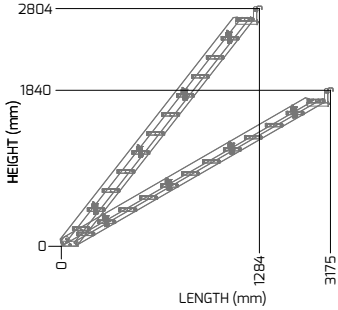

Model Geometry

DESSA RANGER™ 278305

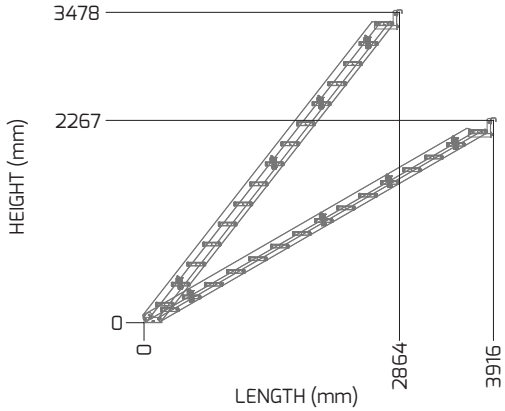

DESSA RANGER™ 278309

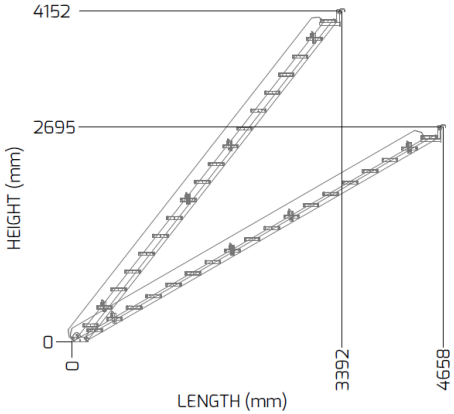

Tread Details

Code	No. of Treads	Tread Width
278301	3	720mm
278302	6	720mm
278303	9	720mm
278304	12	720mm
278305	15	720mm
278309	18	720mm

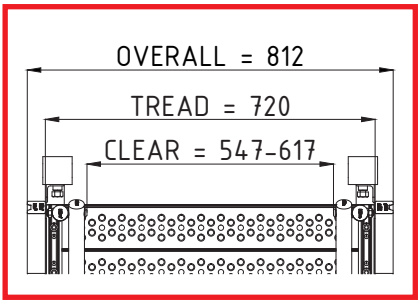

Structural Performance Data

Model Number	Uniformly distributed load (kN/m²)	Point Load (kN)
278301	>1.5	1.5
278302	>1.5	1.5
278303	>1.5	1.5
278304	>1.5	1.5
278305	=1.5	1.5
278309	=1.5	1.5
Note: Uniformly distributed load case assumes every tread loaded simultaneously. Point load case is maximum per tread.		

Typical Layouts

Tube & Fitting Scaffold, Alternating Direction, External, Parallel

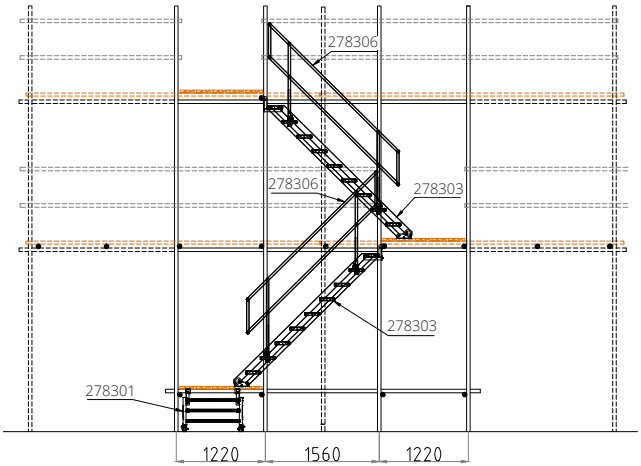

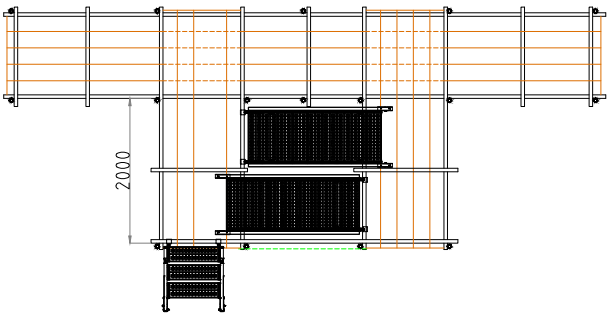

Typical Layouts

Tube & Fitting Scaffold, Alternating Direction, External, Perpendicular

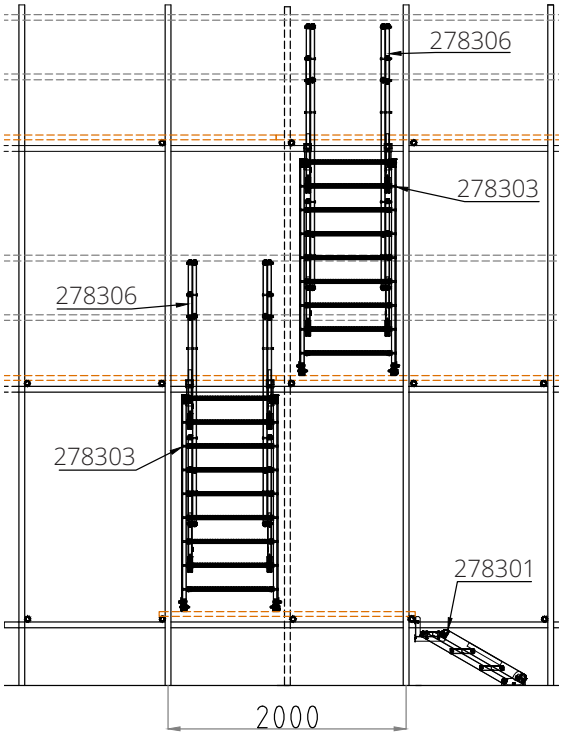

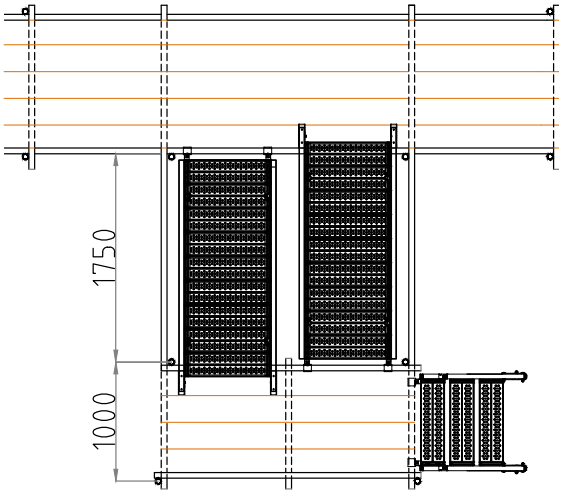

Specific Risk & Hazards to Health

During Installation

- Ensure that appropriate PPE is worn at all times during the installation process. As a minimum, this will entail gloves, steel toe cap boots and a hard hat.
- The manual handling, lifting and placement of the RANGER™ Stair units from RS0006 upwards require a minimum of two operatives.
- Avoid placement of objects between the treads at the tread/stringer intersection whilst the stair is being adjusted as this gap is variable whilst adjustments are being made.
- Ensure that all guardrails and toe boards are installed and secured safely at each landing position.

Post Installation

- Ensure at least one hand is placed on the guardrails at all times whilst the RANGER™ Stair units are being traversed.
- Avoid running whilst entering, traversing and exiting the RANGER™ Stair units.
- Ensure that the RANGER™ stair treads are kept free from debris and loose materials at all times.
- Materials are not to be stored on the RANGER™ stair units.
- Ensure that the RANGER™ Stair treads are kept free from grease or oil spillages.
- Ensure that the locking stays are engaged at all times and are not tampered with.
- Ensure that the connector brackets are firmly engaged.
- Some corrosive environments and extreme temperatures may affect the performance and durability of the alloy stairway. Contact DESSA's technical team for advice if these are suspected to be influencing the DESSA RANGER™ Stair.

Inspection & Maintenance

Inspection

The following list requires inspection on a weekly basis, or prior to each installation of the DESSA RANGER™ Stair:

- Check all nuts and bolts are in position and tight.
- Check all bolts for looseness.
- Check all treads for damage.
- Check all stringers for damage.
- Check connector brackets for damage.
- Check guard rail sockets for damage.

Maintenance

The DESSA RANGER™ Stairs are a fully bolted construction and therefore any routine maintenance is straightforward using the minimum tools. Tools required: 12mm spanner, 8mm allen key.

Disclaimer & Copyright

Disclaimer

Whilst Altrad Hire & Sales (UK) Ltd has taken every reasonable effort to ensure the information contained within this publication is correct and complete at the time of printing, you should be aware that there will be periodical changes and Altrad Hire & Sales (UK) Ltd does not accept any liability for any inconvenience, loss or damage caused as a result of any inaccuracy or omission within this publication.

Copyright

No unauthorised reproduction of any images, text or other matter contained herein is permitted. All rights are expressly reserved, including copyright, design right, moral and patent rights (where applicable). We reserve the right to take legal action in respect of any infringement of said rights.

Find Your Nearest Branch:

Simply scan the QR code and input your postcode by clicking on '**Find your local branch**', our website will then show the nearest branch to your location.

ALTRAD HIRE & SALES

Altrad Hire & Sales Ireland Head Office
Killeen Road, Bluebell, Dublin, Ireland
Tel. 01 601 1500
enquiries.hs@altrad.com
www.altradhireandsale.com

Altrad Hire & Sales UK Head Office
Trinity Street, Off Tat Bank Road, Oldbury, B69 4LA
Tel. 0121 543 2950
enquiries.hs@altrad.com
www.altradhireandsale.com