SCAFFOLDING

READYLOK & EXTENDABLE TRANSOMS

User Guide

HIRE & SALES

ALTRAD

BH/08.26

Altrad Hire & Sales

Support for Construction & Industry

Altrad Hire & Sales is the UK's leading supplier of: Scaffolding, Temporary Fencing, Light Access, Edge Protection, Safety Decking and Groundworks for hire and sale.

OUR **CUSTOMER COMMITMENT** IS TO DELIVER:

BEST **QUALITY**

We work closely with our suppliers to ensure consistent product quality every time. All our products are specified to meet or exceed statutory requirements, verified by our Quality Assurance team.

BEST **AVAILABILITY**

Our nationwide branch network, transport fleet and stock holding ensure we can supply your equipment needs. What, When and Where you need equipment.

BEST **PARTNERSHIP**

We can take care of all your equipment needs; supplemented by a full range of engineering, design, specification and business services. Our focus is to work together, supporting the growth of your business.

BEST **VALUE**

Our global supply chain, purchasing and lean business means we don't pass on unnecessary costs to you. We aim to provide consistently low prices and the best value when you buy or hire from us.

Contents

Readylok & Extendable Transoms

Introduction 3

Board Spans 3

Component Identification 4

Readylok Transoms 5

Safe Working Load with Ledger Bracing Omitted 5

Extendable Transoms 6/7

Extendable Hop-Up Brackets 8

Certificates of Conformity - NASC TG20:13 9

General Safety and Maintenance 10

Disclaimer 10

Copyright 10

Readylok & Extendable Transoms

Introduction

Readylok prefabricated transom units and associated intermediate extendable transoms allow users to take advantage of system scaffold efficiency (fast erection, reduced components) within their tube & fitting scaffold erection.

Advantages:

- Fixed length end connections facilitate efficient setting out and self-alignment.
- Reducded number of components due to coupler's ability to join 3 tubes instead of 2.
- Elimination of ledger bracing (compliance criteria within TG20:13).

Simplifies erection and striking

Cuts labour costs

Uses existing stocks of tubes and fittings

Reduces site losses

Board Spans

Products described in this user guide are intended for use with standard scaffold boards as specified in BS2482:2009 and NASC TG5:10. Maximum spans are assumed as 1.2m/1.5m accordingly.

Readylok & Extendable Transoms

Component Identification

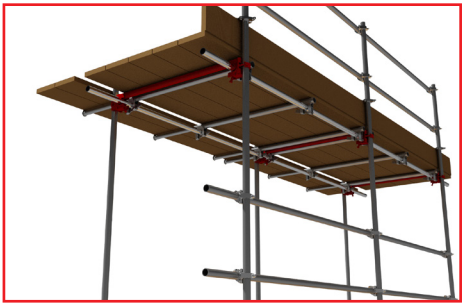

Readylok Transom

Extendable Transom

Universal Extendable Transom

Extendable Hop-Up Bracket

Compliance with criteria within TG:20:13 should be checked by a competent person.

Readylok & Extendable Transoms

Readylok Transoms

Used at standards at every lift to join the standard/ ledger/ transom. Typically at 2m CTS. These facilitate setting out to pre-determined bay widths (3/4/5 board). The fixings allow the transom and standard to occur at the same node point, reducing parts and adding to structural rigidity. The added rigidity, used in accordance with NASC TG20 compliance sheets can eliminante ledger bracing for clear walkways and increased build efficiency.

Code	Description	Weight
046531	3 Board Readylok Transom	8.32kg
046536	4 Board Readylok Transom	8.66kg
046515	5 Board Readylok Transom	9.00kg

Safe Working Load with Ledger Bracing Omitted

Debris netted independant with Readylok Transoms, in accordance with NASC TG20:13 compliance sheet, can be erected up to 16m to the top lift with up to 1 inside board; 14m (load class 3) or 12m (load class 4) with 2 inside boards.

Load Class (BS EN12811)	Duty	Maximum Loading*
3	General Purpose	2.0 kN/m^2
3	Heavy Duty	3.0 kN/m^2

** One lift loaded, with one lift 50% loaded.*

Inside boards loaded to 0.75 kN/m2 at working lift.

Foundation design leg load (for the client): 13.9kN

***For requirements outside of the above compliant parameters, scaffold must be designed for site specific conditions by a competent engineer. See 'Certificates of Conformity' section.*

Readylok & Extendable Transoms

Extendable Transoms

Used within bays to reduce board spans between Readylok and/or main transoms, with a telescopic extension designed to support inside boards.

There are two types, the fixed width extendable and the Universal extendable transom.

The fixed width extrendable transom (FET) is suited to ledgers at fixed, pre-determined distances, the FET is secured by steel wedges set by hammer blows at the front and rear. Different versions are required to suit 4 board or 5 board wide scaffolds and an additional 3 inside boards are offered by the extendable insert.

The universal extendable transom (UET) suits tube and fittings scaffolds, system scaffolds and Readylok scaffolds. It can be used on 4 or 5 board wide main platforms. For 4 board wide scaffolds a fixed inside board exists and an additional 3 inside boards are offered by the extendable transom insert. For 5 board wide scaffolds there are no fixed inside boards and up to 3 inside boards are offered by the extendable transom insert. The rear of the UET is a modified Readylok bracket and is secured using a standard scaffold spanner, the front is secured using a single coupler.

for both transom types it is essential that the insert is fixed in position during transportation and storage, this is achieved by tightening the front bolt.

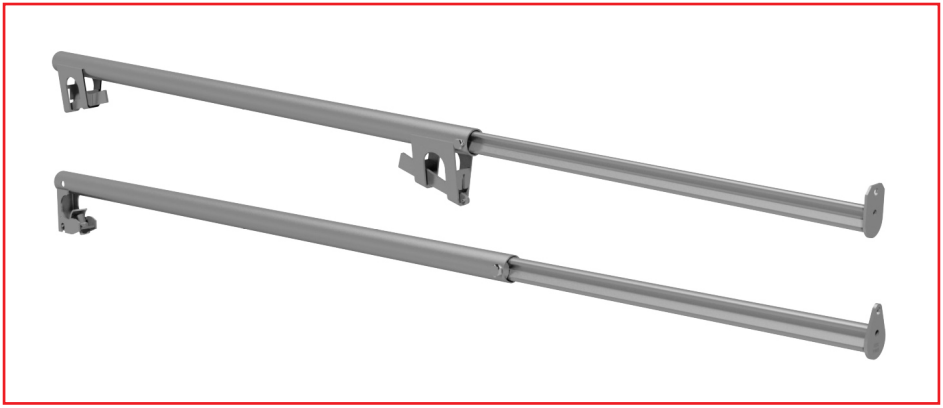

Readylok & Extendable Transoms

Extendable Transoms

Code	Description	Weight
278326	866mm (4+3), Use with 4 board Readylok	9.00kg
278328	1098mm (5+3), Use with 5 board Readylok	8.66kgkg
278334	1300mm (5+3) Genlok with Stub	7.00kg
278336	Extendable Tube Transom (5+3)	8.60kg
278330	Universal Extendable Transom (5+3)	7.25kg

Safe working loads based on bending only

2 Inside Boards

No. of transoms per 13' board	Nominal CTS. (M) - (inches)	Allowable load (kN/m²)	Load Class (BS EN12811)
4	(1.2m) - (48')	5.6	5
5	(0.9m) - (39')	7.5	6
6	(072m) - (36')	9.4	6
7	(0.6m) - (24')	11.3	6

3 Inside Boards

No. of transoms per 13' board	Nominal CTS. (M) - (inches)	Allowable load (kN/m²)	Load Class (BS EN12811)
4	(1.2m) - (48')	2.5	3
5	(0.9m) - (39')	3.4	4
6	(072m) - (36')	4.3	4
7	(0.6m) - (24')	5.1	5

Readylok & Extendable Transoms

Extendable Hop-Up Brackets

These brackets provide an alternative for inside board support. Extension piece allows for up to 3 boards. Design enables inside platform to move up/down without effecting main platforms. Ensure extension piece is retracted and secured with the bolt during storage and transportation.

Code	Description	Weight
278337	Extendable Hop-Up Bracket (2+1)	6.55

Designed to be used on independant scaffolds or birdcages. the scaffold design should clarify that the inside platforms supported by hop-up brackets should be limited to 0.75kN/ m2 (see table below). Intended for light access, not for storage of materials

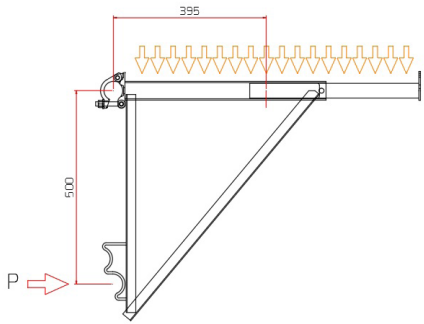

Load (kN/m²)	Bracket CTS (m)	Load P (kN)	Load Class (BS EN12811)
0.75	1.2	0.6	1
1.5	1.2	1.2	2

Load P is the horizontal reaction at the lower bracket and occurs at 1.2m CTS. The scaffold designer should check the support ledger can resist this load.

Readylok & Extendable Transoms

Certificates of Conformity - NASC TG20:13

Altrad Hire & Sales's Readylok transoms have been tested in accordance with the NASC requirements and test procedures for TG20 compliance.

Working with the NASC, Altrad Hire & Sales carry out testing on their products to ISO9001:2008 quality Management Standards.

Certificates on Conformity are available (upon request) to cover the Readylok system.

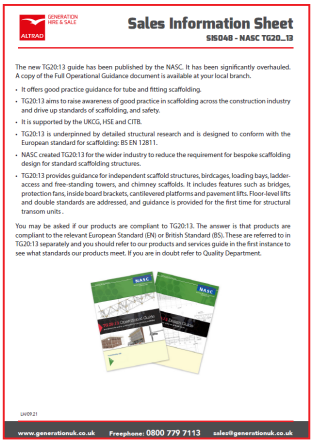

GENERATION HIRE & SALE

ALTRAD

Sales Information Sheet

SIS048 - NASC TG20...13

The new TG20:13 guide has been published by the NASC. It has been significantly overhauled. A copy of the Full Operational Guidance document is available at your local branch.

- It offers good practice guidance for tube and fitting scaffolding.
- TG20:13 aims to raise awareness of good practice in scaffolding across the construction industry and drive up standards of scaffolding, and safety.
- It is supported by the UKCG, HSE and CITB.
- TG20:13 is underpinned by detailed structural research and is designed to conform with the European standard for scaffolding: BS EN 12811.
- NASC created TG20:13 for the wider industry to reduce the requirement for bespoke scaffolding design for standard scaffolding structures.
- TG20:13 provides guidance for independent scaffold structures, birdcages, loading bays, ladder-access and free-standing towers, and chimney scaffolds. It includes features such as bridges, protection fans, inside board brackets, cantilevered platforms and pavement lifts. Floor-level lifts and double standards are addressed, and guidance is provided for the first time for structural transom units .

You may be asked if our products are compliant to TG20:13. The answer is that products are compliant to the relevant European Standard (EN) or British Standard (BS). These are referred to in TG20:13 separately and you should refer to our products and services guide in the first instance to see what standards our products meet. If you are in doubt refer to Quality Department.

UHR121

www.generationuk.co.uk Freephone: 0800 779 7113 sales@generationuk.co.uk

Tabel 1, below, issued in a guide from the NASC in July 2016 shows characteristic values. They are now design values. the stiffness values are minimum average values for each group of at least 5 tests. Design values based on Table 1 are given in Table 5.15 of the NASC TG20:13 Design Guide.

Structural property	Symbol	Min. value	Units
1: Characteristic slip resistance down the standard (when loaded via the ledger)	F_{sy}	10.00	kN
2: Characteristic slip resistance along the ledger	F_{sx}	1.85	kN
3: Transom to standard – rotation about the ledger axis			
3a: - characteristic resistance moment	M_{ksx}	1.75	kNm
3b: - rotational stiffness up to moment = 1.06 kNm	$C_{\varphi sx1}$	45.00	kNm/rad
4: Transom to standard – rotation about transom axis			
4a: - characteristic resistance moment	M_{ksz}	1.65	kNm
4b: - rotational stiffness up to moment = 1.00 kNm	$C_{\varphi sz1}$	24.00	kNm/rad
5: Transom to ledger - rotation about the standard axis			
5a: - characteristic resistance moment	M_{kly}	0.70	kNm
5b: - rotational stiffness up to moment = 0.42 kNm	$C_{\varphi ly1}$	7.50	kNm/rad

Table 1: Required structural properties for TG20 compliant structural transom couplers

Readylok & Extendable Transoms

General Safety and Maintenance

All operatives erecting scaffold have a duty of safety to themselves, others working on or near the scaffold and all persons who may be nearby.

Opertives should work within the requirements of the Health and Safety at Work Act 1974, Construction Regulations Safe Place of Work Act 1996 and the Work at Height Regulations 2005.

All components shown in this guide should be inspected before and during erection as well as after dismantle for damage and/or corrosion. Bolt threads should be free to turn, telescopic parts of extendable transoms should be free to move as designed. When storing/transporting extendable items, they should be secured and locked off to prevent damage.

Disclaimer

Whilst Altrad Hire & Sales has taken every reasonable effort to ensure the information contained within this publication is correct and complete at the time of printing, you should be aware that there will be periodical changes and Altrad Hire & Sales does not accept any liability for any inconvenience, loss or damage caused as a result of any inaccuracy or omission within this publication.

Copyright

No unauthorised reproduction of any images, text or other matter contained herein is permitted. All rights are expressly reserved, including copyright, design right, moral and patent rights (where applicable). We reserve the right to take legal action in respect of any infringement of said rights.

Find Your Nearest Branch:

Simply scan the QR code and input your postcode by clicking on '**Find your local branch**', our website will then show the nearest branch to your location.

ALTRAD HIRE & SALES

Altrad Hire & Sales Ireland Head Office
Killeen Road, Bluebell, Dublin, Ireland
Tel. 01 601 1500
enquiries.hs@altrad.com
www.altradhireandsale.com

Altrad Hire & Sales UK Head Office
Trinity Street, Off Tat Bank Road, Oldbury, B69 4LA
Tel. 0121 543 2950
enquiries.hs@altrad.com
www.altradhireandsale.com