GROUNDWORKS
RAPTOR BRACE
User Guide

HIRE & SALES

ALTRAD

BH/07.26

Altrad Hire & Sales

Support for Construction & Industry

Altrad Hire & Sales is the UK's leading supplier of: Scaffolding, Temporary Fencing, Light Access, Edge Protection, Safety Decking and Groundworks for hire and sale.

OUR **CUSTOMER COMMITMENT** IS TO DELIVER:

BEST **QUALITY**

We work closely with our suppliers to ensure consistent product quality every time. All our products are specified to meet or exceed statutory requirements, verified by our Quality Assurance team.

BEST **AVAILABILITY**

Our nationwide branch network, transport fleet and stock holding ensure we can supply your equipment needs. What, When and Where you need equipment.

BEST **PARTNERSHIP**

We can take care of all your equipment needs; supplemented by a full range of engineering, design, specification and business services. Our focus is to work together, supporting the growth of your business.

BEST **VALUE**

Our global supply chain, purchasing and lean business means we don't pass on unnecessary costs to you. We aim to provide consistently low prices and the best value when you buy or hire from us.

Contents

Introduction

Design....4

Frame Dimensions....4

Hydraulic Adjustments....4

General Guidance Notes

Safe System of Work and Method Statement....5

Health & Safety Legislation....5

Planting & Lifting....5

Tools and Lifting Chains For Handling....6

Edge Protection, Access and Hard Standing Areas....6

During Excavation Works On Site....6

After Excavation Works are Completed....6

Return of Equipment Off Hire....7

Transportation....7

Identification Of Components

Identification Of Components....7/8

Brace Length Chart

Brace Length Chart....9

Typical Module Assembly and Site Connection Details

Return of Equipment Off Hire....9

Typical Sequence Of Sheets and Frame Installation

Method 1....10

Method 2....11

Removal Of Frames

Removal Of Frames....12

Use Of Restraint Chains

Use Of Restraint Chains....13

Stacking & Handling

Stacking & Handling....14

Contents

Powered Pump Details & Procedures for Extending/Retracting Modules

Altrad Hire & Sales Shoring Fluid 12

Procedure for extending modules to predetermined lengths 12

Do's and Dont's

Procedure for extending modules to predetermined lengths 13

Disclaimer & Copyright

Disclaimer & Copyright 14

Introduction

The Raptor system is intended to be used as a temporary waling system to sheeted excavations. It is not intended for other purposes.

This booklet provides basic information for users of Raptor to assist them in their preparation of A safe system of work on site.

Raptor should NOT be used in seawater applications without prior consultation with Altrad Hire & Sales.

Design

No information on design is included in this booklet.

Clients are strongly advised to ensure that a competent engineer is employed to provide a Suitable design for excavation schemes requiring the use of Raptor products.

Altrad Hire & Sales offer a design service and can, on request, also provide information on the Strength capacities of Raptor products for clients undertaking their own designs.

Frame Dimensions

This booklet gives information for frame dimensions for Raptor Walings.

Hydraulic Adjustments

The Raptor system incorporates a hydraulic system of adjustment which is designed to extend or Retract the frames under conditions of no or low loading: e.g. as when first installed or as they Become redundant after backfilling the excavation.

Once they are sustaining significant ground loads, hydraulic extension or retraction of the frames Is inadvisable and is unlikely to be possible. Methods of working should therefore avoid the need For frame adjustment/removal whilst the walings are heavily loaded.

General Guidance Notes

Safe System of Work and Method Statement

Assuming that the location, plan size and depth of an excavation, together with an arrangement of sheets end frames has already been determined, the Health and Safety at Work Act requires that a safe system of work is adopted to carry out the work on site. These guidance notes are intended to draw attention to practical aspects of Raptor installation which need to be considered in compiling method statements for a safe system of work.

In particular, the client's attention is drawn to the lengths and weights of the frame members and the need for planning the lifting operations involved.

All major components of the Raptor system are fitted with lifting lugs for safe slinging. Regular users of Altrad Hire & Sales Manhole Brace systems should note that the system components are considerably heavier

Health & Safety Legislation

The Health and Safety legislation requires that personnel deployed are suitably trained and experienced and supervised by a competent person. All lifting operations are to be controlled by an appointed person in accordance with LOLER regulations. The main activities associated with Raptor installation are:

- Unloading the delivery vehicle.
- Bolting up and pinning steelwork together to form walings of the required length.
- Slinging and lifting modules into position in the excavation, and connecting the comers to form frames.
- Connecting the pump to each hydraulic unit in tum, pressurising the frames and fitting restraint chains.

Planting & Lifting

An appliance is required for off-loading and installation. For off-loading there needs to be sufficient clearance under the main hook to allow lifting with a safe angle between the lifting sling legs.

If the modules are to be lifted into the excavation then the appliance should be located a safe distance from the edge of the excavation and the lifts and radii checked against the safe lifting capacities of the appliance. A surcharge for the excavator must have been allowed for in the excavation brief/ design. In this booklet it is assumed that the frames will be lifted into the excavation one leg at a time and assembled in the excavation. Likewise, for removal, it is assumed that the frame will be dismantled in the excavation and the legs removed one at a time.

General Guidance Notes

Tools and Lifting Chains for Handling

Essential equipment required is:

- Sledgehammers for making pinned connections.
- Podgers/spanners for making bolted connections.
- Lifting chains of suitable length and capacity and with current certification. The modules have lifting lugs designed to take 'C' hooks.

In most cases the centre of gravity of the lifts involved will not be at mid-length so shortening clutches are advisable. Altrad Hire & Sales offers sets of 4 leg 10mm chains with 4.0m leg length complete with shortening clutches and safety hooks - though clients should check that the leg length is suitable to use with their lifting machinery.

Edge Protection, Access and Hard Standing Areas

These include:

- Suitable area to off-load the lorry and assemble the walings.
- Suitable hard standings for the lifting appliance to operate from if it is intended to lift the walings into the excavation.
- Ladders and possibly other provisions to provide safe access into the excavation to install
- restraint chains and connect pump hoses.
- Edge protection, ladders and possibly other provisions to provide safe access into and out of
- the excavation (Edge Protection and Ladder Access Platforms can be supplied by Altrad Hire & Sales).

During Excavation Works on Site

If Altrad Hire & Sales have designed the sheeting and frame arrangement for the excavation, they will have used ground data provided by the client. If during the excavation it is noted that the actual ground conditions and/or ground water levels differ from those provided at design stage, it is advisable to have the schemed rechecked.

After Excavation Works are Completed

Plan for edge protection to be installed as early as possible. Regularly inspect the excavation for signs of excessive movements of sheets or modules. Check the hydraulic units for signs of fluid leakage. Keep plant, soil heaps and stored materials well clear from the edge of the excavation.

General Guidance Notes

Return of Equipment Off Hire

Clients should ensure that on removal, the equipment is returned clean and in lengths as supplied.

Transportation

Ensure all equipment is loaded to the satisfaction of the HGV driver and is securely restrained to the vehicle bed.

Identification Of Components

				Sheet To Sheet		Internal Clearance	
				Hydraulic Unit Fully		Hydraulic Unit Fully	
				Closed	Open	Closed	Open
2.0m Leg	Comprises Of	1x HU		1950	2550	1125	1725
3.0m Leg	Comprises Of	1x HU	+1.0m	2950	3550	2125	1825
4.0m Leg	Comprises Of	1x HU	+1.0m+1.0m	3950	4550	3125	1925
5.0m Leg	Comprises Of	1x HU	+1.5m+1.5m	4950	5550	4125	2025
6.0m Leg	Comprises Of	1x HU	+2.5m+1.5m	5950	6550	5125	2125
7.0m Leg	Comprises Of	1x HU	+2.5m+2.5m	6950	7550	6125	2225
8.0m Leg	Comprises Of	1x HU	6.0m	7950	8550	7125	2325
9.0m Leg	Comprises Of	1x HU	+6.0m+1.0m	8950	9550	8125	2425
10.0m Leg	Comprises Of	1x HU	+1.0m+6.0m+1.0m	9950	10550	9125	2525
11.0m Leg	Comprises Of	1x HU	+1.5m+6.0m+1.5m	10950	11550	10125	2625
12.0m Leg	Comprises Of	1x HU	+1.5m+6.0m+2.5m	11950	12550	11125	2725
13.0m Leg	Comprises Of	1x HU	+2.5m+6.0m+2.5m	12950	13550	12125	2825
14.0m Leg	Comprises Of	1x HU	+6.0m+6.0m	13950	14550	13125	2925
15.0m Leg	Comprises Of	1x HU	+6.0m+6.0m+1.0m	14950	15550	14125	3025

Identification Of Components

Pins - 127kg

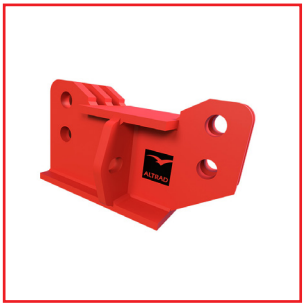

550 Extension - 240kg

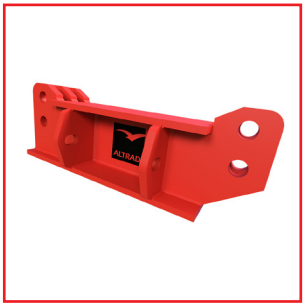

1000 Extension - 350kg

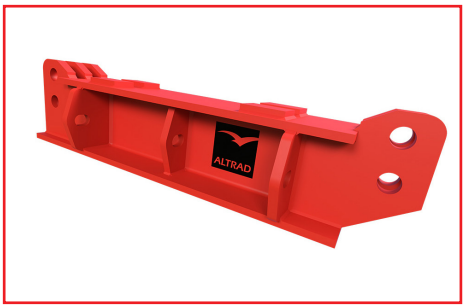

1500 Extension - 450kg

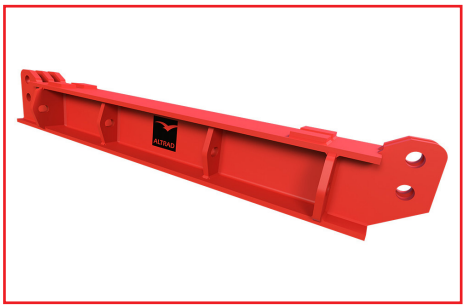

2500 Extension - 450kg

6000 Extension - 1200kg

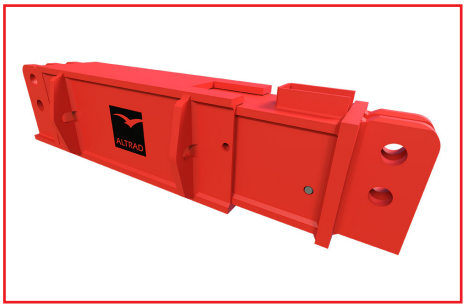

Raptor Hydraulic - 625kg

Accessories

- Air Powered Hydraulic Pump, Weight 75 kg (full).
- 4 Leg Chain Sling. Weight 47 kg. 10mm chain. 4m E.L.L. c/w safety hooks and chain shorteners. Refer to Lifting Chain User Guide for further details.
- Restraint Chain, Weight 9 kg. 10mm chain. 2m E.L.L. c/w forged hook. Capacity 2000 kg. NOTE: When used in combination with standard sheets, capacity reduces to 1000 kg.

Brace Length Chart

Typical Module Assembly and Site Connection Details

Return of Equipment Off Hire

Legs of the brace are made to the correct length, range where possible prior to delivery, so that only the corners need be connected using Pins and spring retention clips. The lug is a close fit in the clevis, so that the legs should be as level as possible during assembly to make it easier to assemble the joint. It is worth spending some time on levelling the ground on which the frame is to be assembled. If the legs have to be altered to another range on site, i.e. by adding or removing an extension section, the intermediate connection detail is used.

Typical Sequence Of Sheets and Frame Installation

NOTE: Raptor equipment is not intended to be installed or removed in complete frames - but only as described below, i.e one leg at a time.

Method 1: Installation of 2no frames by excavator, without piling hammer, placing one leg at a time.

1. Fully excavate to first frame level.
Alternatively, excavate slit trench only to first frame level.

2. Place each leg in excavation and assemble the frame. Connect hydraulics and pump frame out to correct dimension. Remove hydraulics.

3. Using the frame and excavated face as a guide, place sheets and using the relevant drive cap, drive with excavator bucket as far as possible.

4. Connect restraint chains as per scheme drawing.

5. Connect hydraulics and individually pressurise all ram, close lock off valves and remove hydraulics.

6. Dig through to next frame position and push sheets down.

7. Reposition restraint chains as necessary.

8. Place legs of second frame in excavation and assemble (safe working must be maintained).

9. Attach restraint chains between first and second frames.

10. Connect hydraulics and individually pressurise all lower frame ram units, close lock off valves and remove hydraulics.

11. Push sheets down to give "toe-in" required to complete dig.

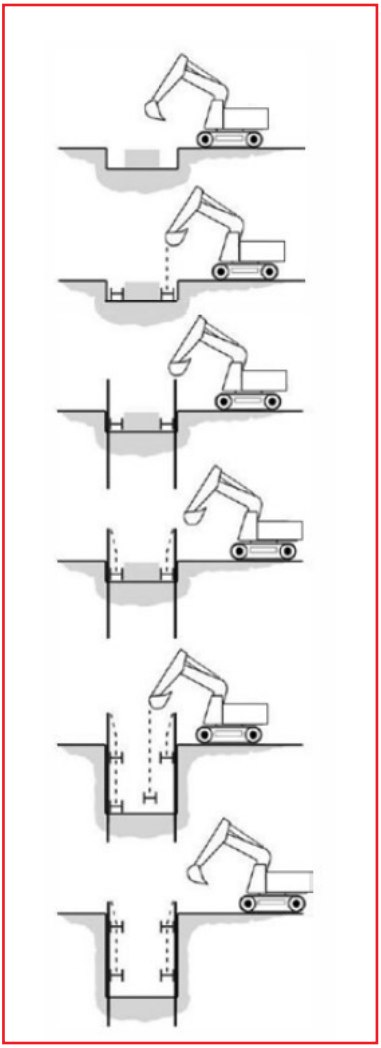

Important Note

This method requires operatives working in the excavation and the contractor must ensure safe working conditions at all times.

Typical Sequence Of Sheets and Frame Installation

Method 2: Installation of 2no frames by fully driving sheets/piling with piling hammer. Using the crane for lifting and driving operations and the excavator for digging operations.

1. Fully drive sheets/piling using a piling guide.

2. Remove piling guide and excavate to first frame level.

3. Place each leg in excavation and assemble the frame.

4. Connect restraint chains.

5. Connect hydraulics and individually pressurise all ram units, close lock-off valve and remove hydraulics.

6. Dig through to next frame position.

7. Place legs of second frame in excavation and assemble (safe working must be maintained).

8. Attach restraint chains between first and second frames.

9. Connect hydraulics and individually pressurise all lower ram units, close lock-off valve and remove hydraulics.

10. Complete dig.

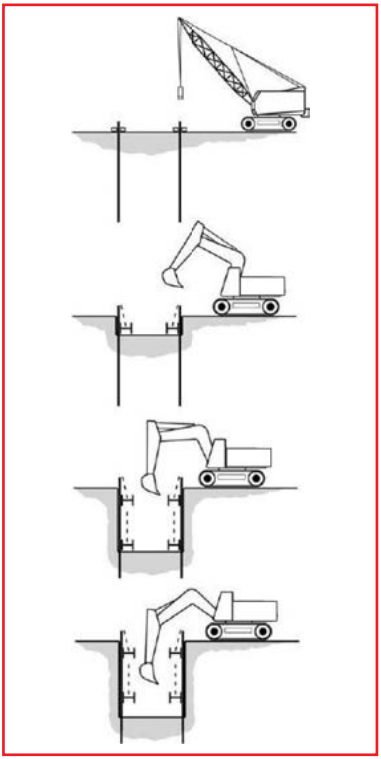

Important Note

This method requires operatives working in the excavation and the contractor must ensure safe working conditions at all times.

Removal Of Frames

Backfill to the underside of the lowest frame and carry out any compaction required. Ensure frame is securely packed or supported from below. Connect hydraulics and individually open lock off valves (max 2no turns) and fully retract all lower frame ram units. Remove restraint chains. Remove comer pins, attach lifting Sling to lifting eyes and lift each leg one at a time from excavation. Repeat the procedure for the upper frame.

When the frames have been removed and excavation backfilled, the sheets can be removed, one at a time using a trench sheet extractor.

Use Of Restraint Chains

Restraint chains are provided as a back-up support arrangement in the unlikely event of hydraulic failure of one of the Raptor hydraulic legs. They are NOT to be used for any other purposes and particularly, are NOT to be used as lifting chains. They are NOT intended as a means of suspension to be relied upon during installation of removal of the frames.

Always ensure all the restraint chains are fitted as per arrangement shown on the scheme drawing, or if no scheme has been prepared 1 no chain every 2.Sm approx of module. Remove as much slack as possible from the chain by repositioning the lower 'D' shackle.

Users must ensure that frames are securely supported by means other than the restraint chains prior to de-pressurising the frames.

Stacking & Handling

Suitable firm level dry areas should be made available on site for stacking and pre-assembly work.

Suitable lifting equipment of adequate capacity should be provided for off-loading, pre-assembly work, installation and dismantling. Slinging should always be carried out by suitably experienced and competent personnel.

Return pre-assembled legs and struts as supplied from Altrad Hire & Sales Depots.
Always stack all items in single layers wherever possible. If space does not permit this, walings should be stacked on timbers in rows of 4no (max height 3 rows).

Powered Pump Details & Procedures for Extending/ Retracting Modules

Altrad Hire & Sales Shoring Fluid

The pump is normally supplied with a full tank of pre-mixed fluid. If the fluid is separately supplied "neat" in 5 litre containers, it should be poured into the pump and cold, clean water added according to prevailing temperature conditions. Protective gloves should always be worn when handling shoring fluid.

NOTE: A Shoring Fluid safety data sheet is available on request from Altrad Hire & Sales.

Temp Range (Degrees °C)	Shoring Fluid	Water (Litres)
Above 0	5	20
-6 to 0	10	20
-10 to -7	15	15
-10 and below	Neat Only	-

Procedure for extending modules to predetermined lengths

either prior to assembly into frames, or to set an assembled frame to a given size

- Ensure each module is set up level and safely on packs just clear of the ground so that it will be free to extend.
- Connect the pump hoses to the ram unit of the modules.
- Open the safety lock-off valve on the module (by rotating anti-clockwise).
- Set the pump control valve to "Extend"
- Watch the module extend to the required length.
- Shut down the pump by closing off the air supply valve.
- Close the safety lock off valve on the ram unit (by rotating clockwise).
- Disconnect the pump hoses from the ram.

Do's and Don'ts

DO install the legs of each frame one at a time.

DO install frames as level as possible.

DO use restraint chains between each frame to the top of the sheets.

DO ensure the lock-off valves are open prior to pumping.

DO ensure that the pressure is being held on the rams before closing the lock-off valves.

DO release the pump pressure after closing the lock-off valves to ease removal of hoses.

DO keep the couplers of the hoses dirt free by clipping male and female ends together after use.

DO NOT attempt to install or remove by lifting complete frames.

DO NOT over pressurise the system as this can damage the rails.

DO NOT pressurise a frame with a large gap between the rails and the sheets. A packer must be inserted to fill the gap first.

DO NOT attempt to disconnect a hose until the lock-off valve has been fully closed, and pressure has been released at the pump.

DO NOT release ram pressure by depressing or striking the coupler nipple.

DO NOT use restraint chains as a means of suspension during installation or removal of the frames.

Notes:

Disclaimer & Copyright

Disclaimer

Whilst Altrad Hire & Sales has taken every reasonable effort to ensure the information contained within this publication is correct and complete at the time of printing, you should be aware that there will be periodical changes and Altrad Hire & Sales does not accept any liability for any inconvenience, loss or damage caused as a result of any inaccuracy or omission within this publication.

Copyright

No unauthorised reproduction of any images, text or other matter contained herein is permitted. All rights are expressly reserved, including copyright, design right, moral and patent rights (where applicable). We reserve the right to take legal action in respect of any infringement of said rights.

GROUNDWORKS BRANCHES NATIONWIDE

0800 043 8484

Glasgow South
Tel: 01698 870000
Email: glasgowsgw@altrad.com

Widnes
Tel: 0151 420 1111
Email: widneshal@altrad.com

Birmingham North
Tel: 0121 366 7840
Email: birminghamnorthgw@altrad.com

Cardiff Docks
Tel: 07920 674 190
Email: cardiffdocks.hal@altrad.com

Reading
Tel: 01252 838696
Email: readinggw@altrad.com

London East
Tel: 01375 117 170
Email: londoneast.gw@altrad.com

ALTRAD HIRE & SALES

Altrad Hire & Sales UK Head Office
Trinity Street, Off Tar Rows Road, Oldbury, B69 4LA
Tel: 0121 543 2490
groundworksenquiries@altrad.com
www.altradhireandsale.com